LUBRICATION SYSTEM

ON-VEHICLE INSPECTION

1. CHECK ENGINE OIL LEVEL

(a) Warm up the engine, then stop the engine and wait for 5 minutes. Check that the engine oil level is between low and full marks on the oil level gage.
If the engine oil level is low, check for oil leakage and add engine oil up to the full level mark.
NOTICE:
Do not add engine oil to above the full level mark.

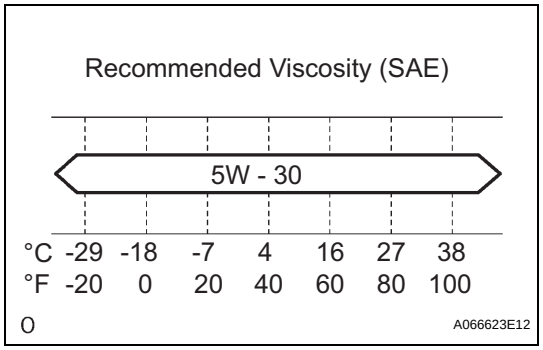

2. CHECK ENGINE OIL QUALITY

(a) Check the oil for deterioration, water intrusion, discoloration or thinning.
If the quality is visibly poor, replace the oil.
Oil grade:
Use API grade SM "Energy-Conserving", or ILSAC multigrade engine oil.
SAE 5W-30 is the best choice for good fuel economy and good starting in cold weather.
If SAE 5W-30 is not available, use SAE 10W-30. However, it should be replaced with SAE 5W-30 at the next oil replacement.

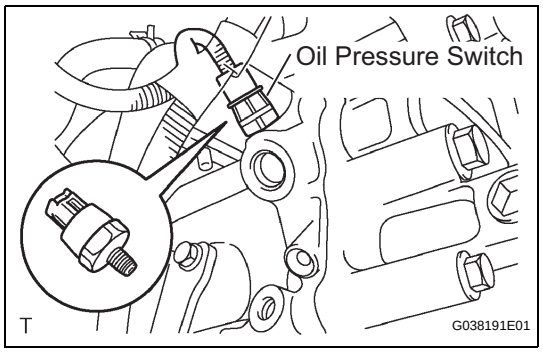

3. INSPECT OIL PRESSURE

(a) Remove the 4 bolts, then remove the No. 1 engine under cover. (PRE RUNNER AND 4WD TYPE)
(b) Disconnect the oil pressure switch connector.
(c) Using a 24 mm deep socket wrench, remove the oil pressure switch.

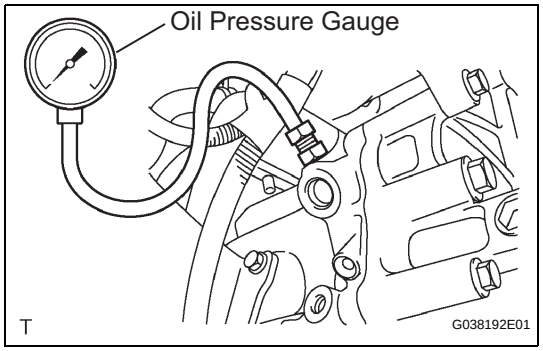

(d) Install the oil pressure gauge.
(e) Warm up the engine.
(f) Inspect the oil pressure.
Oil pressure

When Idling	**29 kPa (0.3 kgf*cm^2, 4.2 psi) or more**
At 3,000 rpm	**160 to 490 kPa (1.6 to 5.3 kgf*cm^2, 23 to 75 psi)**

(g) Remove the oil pressure gauge.

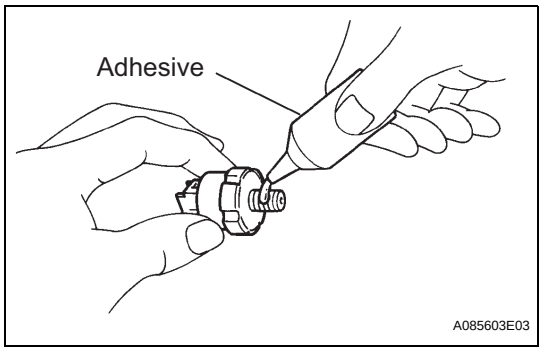

(h) Apply adhesive to 2 or 3 threads of the oil pressure switch.
Adhesive:
Part No. 08833-00070, THREE BOND 1324 or equivalent

(i) Using a 24 mm deep socket wrench, install the oil pressure switch.
Torque: 15 N*m (153 kgf*cm, 11 ft.*lbf)
NOTICE:
Do not start the engine for at least 1 hour after installation.

(j) Connect the oil pressure switch connector.

(k) Check for engine oil leakage.

(l) Install the engine under cover No. 1 with the 4 bolts. (PRE RUNNER AND 4WD TYPE)
Torque: 30 N*m (306 kgf*cm, 22 ft.*lbf)